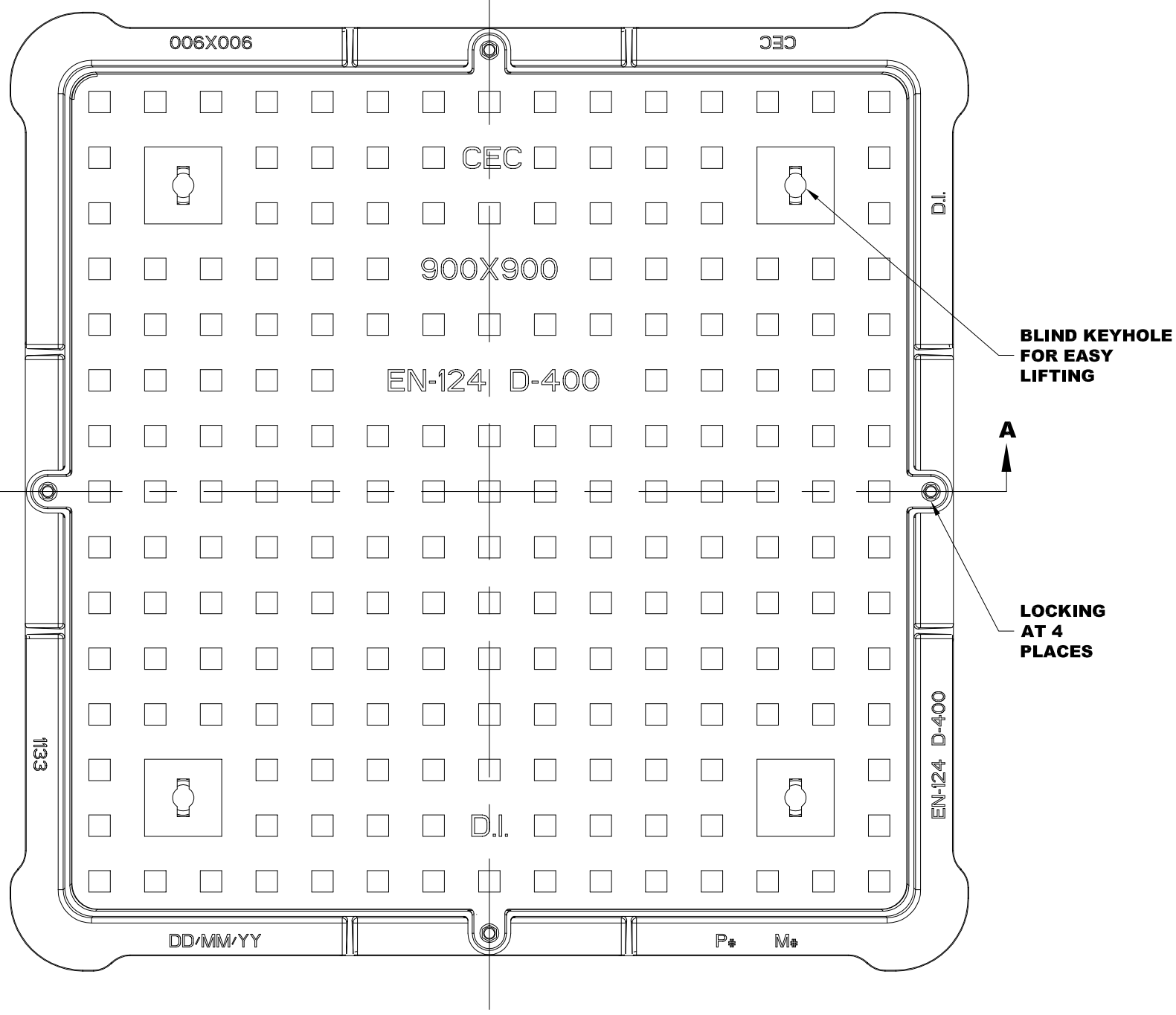

ASSEMBLY PLAN VIEW

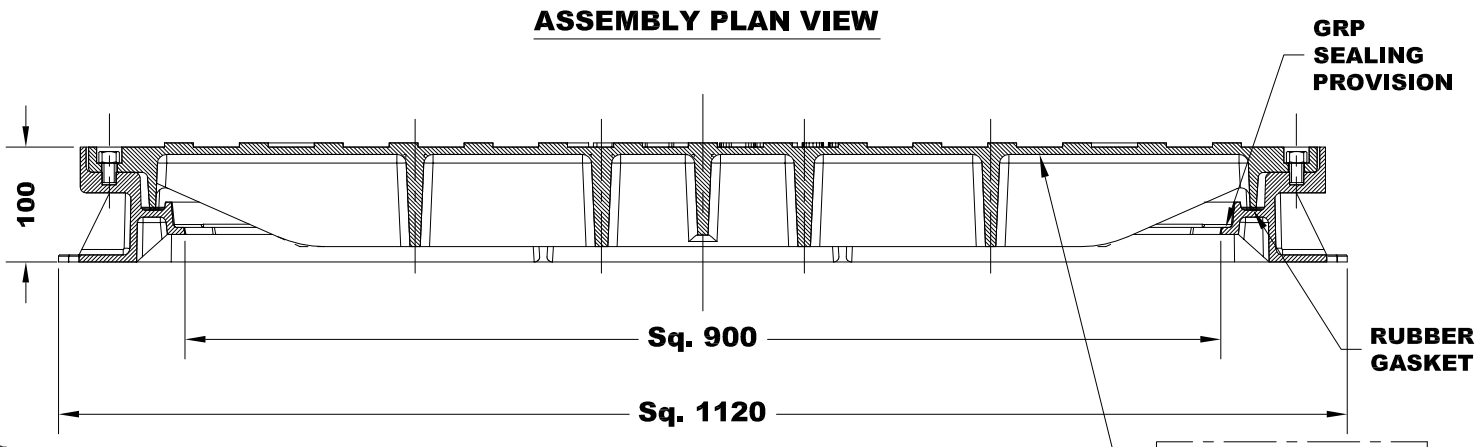

SECTION A-A

MARKINGS AT BOTTOM OF COVER:-

1133, DD/MM/YY, P#, M#

Product features:-

- Non-rock seating.
- Non-Skid Checker design
- Heavy traffic loading (D-400 KN)
- Product design compliance with BS EN 124 Standard
- Closed Keyhole for easy lifting.
- Rubber Gasket Used
- Frame Depth 100mm

Product Options:-

- Epoxy coating
- Customized Badging available

				NAME	DATE	SIGN.
			DRWN. BY:-	A.PAUL	05.02.2018	
			CHKD. BY:-	A.PAUL	05.02.2018	
			APPRD. BY:-	R.PAUL	05.02.2018	
			MATERIAL:- DUCTILE IRON 500/7			
			TOLERANCE:- ISO 8062 (CT-11)			
			SPECIFICATION:- EN-124			
			LOAD:- D-400			
			SCALE:- NTS			
REVISION NUMBER	REVISION DATE	DESCRIPTION	ALL DIMENSIONS ARE IN MM.			

Design by:- Miroslava Tomsikora
Contact - +421905 260 394

DRAWING DESCRIPTION:-

900 x 900 x 100 DUCTILE IRON SINGLE SEAL SOLID TOP HEAVY DUTY LOCKABLE MANHOLE COVER & FRAME WITH GRP SEALING PROVISION

COAT:- PAINTED

SHEET NO:- 1 OF 1

WEIGHT:-

DRG. NO :- **1133**